National Kapodistrian University of Athens

Department of Aerospace Science & Technology

On-Board Computer & Data Handling, Solar Array Design

Technical Design Report

Student: Kyrillos Tsoutsoulis
Course: AERO701 – Space Systems Engineering
Mission Name: HIVE

Contents

1 Abstract **4**

2 On Board Data Handling **4**

3 Preliminary Design & Examples **4**

4 Space Conditions **4**

4.1 Temperature 4

4.2 Radiation 5

5 Defining Mission Requirements **5**

5.1 Evaluating Mission Objectives 5

5.2 Top-Level Computer Requirements 5

5.3 Defining Computer System Requirements 6

6 OBDH Architecture **7**

6.1 Different Options for Configurations of OBC's 7

6.2 Trade-Off Between Options 8

6.3 Simple Logic Block Architecture 12

6.4 Interconnections 13

6.5 MCU for ADCS Housekeeping 14

6.6 Bus Topology 16

7 Mass Memory Calculation & Data Budget **16**

7.1 Mass Memory 16

7.2 Data Budget 16

7.3 Image Compression 17

7.4 Quantitative Impact of On-Board Image Compression 18

8 Electrical Power Subsystem - Solar Array Sizing **19**

8.1 EPS - Introduction 19

8.2 Power System Requirements 19

8.3 Solar Array Design Proccess 19

8.4 Solar Panels Selection 21

8.5 Power Diagram 23

9 Conclusion **24**

List of Acronyms

ADC	Analog-to-Digital Converter.
ADCS	Attitude Determination and Control Subsystem.
AIT	Assembly, Integration and Test.
C&DH	Command and Data Handling.
CAN	Controller Area Network.
CCSDS	Consultative Committee for Space Data Systems.
DDRAM	Dynamic Random Acces Memory.
DoD	Depth of Discharge.
ECC	Error Correction Code.
ECSS	European Cooperation for Space Standardization.
EDAC	Error Detection and Correction.
eMMC	embedded MultiMediaCard.
EO	Earth Observation.
EOL	End-of-Life.
EPROM	Erasable Programmable Read-Only Memory.
EPS	Electrical Power Subsystem.
FDIR	Fault Detection, Isolation and Recovery.
FPU	Floating-Point Unit.
FRAM	Ferroelectrical Random Access Memory.
FSW	Flight Software.
GaAs	Gallium Arsenide.
GCR	Galactic Cosmic Rays.
GPIO	General-Purpose Input/Output.
I2C	Inter-Intergrated Circuit.
LEO	Low Earth Orbit.
LVDS	Low-Voltage Differential Signaling.
MCU	Microcontroller Unit.
MLC	Multi Level Cell.
MPPT	Maximum Power Point Tracking.
MRAM	Magnetoresistive Random Access Memory.
NOR	NOR Flash Memory.
OBC	On-Board Computer.
PCB	Printed Circuit Board.
PDPU	Payload Data Processing Unit.
PPS	Pulse Per Second.

pSLC	Pseudo Single Level Cell.
RBF	Remove Before Flight.
ROI	Region of Interest.
RS-422	Recommended Standard 422.
RS-485	Recommended Standard 485.
SAA	South Atlantic Anomaly.
SDRAM	Synchronous Dynamic Random Access Memory.
SEE	Single Event Effects.
SMP	Symmetric Multiprocessing.
SoC	System-on-Chip.
SPE	Solar Particle Events.
SPI	Serial Peripheral Interface.
SSO	Sun-Synchronous Orbit.
TID	Total Ionizing Dose.
TMR	Triple Modular Redundancy.
TT&C	Telemetry, Tracking and Command.
UART	Universal Asynchronous Receiver-Transmitter.
UHF	Ultra High Frequency.
VHF	Very High Frequency.

1 Abstract

This report presents the preliminary design of the On-Board Data Handling (OBDH) and Solar Array Sizing for the HIVE 32U CubeSat operating in a 450 km sun-synchronous LEO. The OBDH architecture is derived from mission requirements and trade-off analysis, selecting the GomSpace NanoMind HP-MK3 as the baseline OBC due to its high processing capability, SpaceWire/LVDS support, and tiered non-volatile storage enabling multi-day buffering and downlink staging. A subsystem interface mapping is defined around a CAN backbone for platform housekeeping/control and SpaceWire for high-rate payload transfer, complemented by RS-422/RS-485 and I^2C where appropriate, with an STM32-based MCU proposed for ADCS I/O concentration. A payload-driven data budget is developed, and the impact of onboard compression is quantified, showing significant daily volume reduction. The Solar Array Sizing yields a required end-of-life solar array power of 55.5 W, and a 2× NanoPower TSP-45W configuration (90 W) is selected, providing 62% power margin for robust 5-year operations.

2 On Board Data Handling

The on-board data handling (OBDH) subsystem of a spacecraft is the subsystem which carries and stores data between the various electronics units and the ground segment, via the telemetry, tracking and command (TT&C) subsystem.[12] In the earlier decades of the space industry, the OBDH function was usually considered a part of the TT&C, particularly before computers became common on board. In recent years, the OBDH function has expanded, so much that it is generally considered a separate subsystem to the TT&C, which is these days concerned solely with the RF link between the ground and the spacecraft.[5]

On Board the spacecraft, both large computing systems and microcontrollers have become an integral part of the overall system, as well as being part of most spacecraft subsystems. A key feature of on-board flight software (FSW) is the hard, real time and deterministic nature of the execution.[21] While the sensors and actuator, as well as the control law algorithms, are specified by an ADCS specialist, we often include the processing associated with each as part of the on-board processing.[21]

3 Preliminary Design & Examples

For the structure of this mission requirements we are going to use the SMAD model [21].
Other missions have been examined and used as prototypes so we can make assumptions and structure the way this paper is been presented. For concept design and analysis the Light-1[4] mission has been used as the basis for the bus and block diagram design. As main referrences of this report we are using the MSc Thesis *"Design of a CubeSat-Based Multi-Regional Positioning Navigation and Timing System in Low Earth Orbit"* [29], and also the MSc Thesis*"Development of an on-board computer for a nanosatellite."* [20]

4 Space Conditions

4.1 Temperature

Hive will be operating in VLEO 450km of altitude orbit. It is therefore important to take into account the partic ular space environment in LEO while choosing the components used in the

OBC. Indeed, the temperature extremes and radiation that electronic systems will be subjected to may cause serious disturbances and failures.[14]

In Low Earth Orbit, CubeSats will be exposed to temperature extremes, ranging from-55° to +125°C in a short period of time, putting a strain on all materials. This could affect the operational functionality of electronic components and limit their lifetime. It is thus essential to use components specially designed to withstand such a range of temper ature extremes. Moreover, satellites in LEO are particularly affected by space radiation that can pass through a satellite and consequently damage electronic devices. Shielding can help to protect the components from radiation but it adds weight. Another solution is the use of radiation hardened or radiation tolerant components.[20]

4.2 Radiation

There are three main sources of ionizing radiation that can affect CubeSats and their electronic components.

Table 2: Main sources of ionizing radiation affecting LEO spacecraft[20]

Source	**Origin**	**Main particles**	**LEO relevance (summary)**
Galactic Cosmic Rays **(GCR)**	Outside the Solar System; continuous background	High-energy protons and heavy ions	Highly energetic and penetrating; can alter electronic components
Solar Particle Events **(SPE)**	Solar flares / coronal mass ejections; sporadic	Protons, electrons (also X-rays, gamma rays)	Unpredictable bursts; can cause light to severe damage to electrical components
Trapped particles **(Van Allen belts / SAA)**	Charged particles trapped in Earth's magnetic field; intensified over the South Atlantic Anomaly (SAA)	Mainly protons and electrons	Inner belt is closer to Earth over SAA; CubeSats in LEO can be exposed to particularly intense radiation during passes

5 Defining Mission Requirements

5.1 Evaluating Mission Objectives

Hive will be launched in a cubesat deployer and will be launched by a range of launch vehicle. The nanosatellite to use is a 32U cubesat. The satellites will be launched in a V-LEO sun-synchronous 450 km of altitude, with a 5 year de-orbiting requirement. The satellites must maintain their orbit altitude for 5–8 years.[1]

The main payload of the satellites will be the MultiScape 200 camera from Simera Sense.

5.2 Top-Level Computer Requirements

The computer should be based on COTS solution.[1]

Table 3: C&DH System Requirements (excerpt)

Req. ID	Sub.	Requirement Statement	V&V
SR-CDH-01	OBDH	The spacecraft shall acquire, timestamp, and store housekeeping telemetry for all subsystems.	A / T
SR-CDH-02	OBDH	The spacecraft shall support command reception, command execution, and event logging.	A / T
SR-CDH-03	OBDH	The spacecraft shall provide onboard data storage capacity of TBD GB for mission operations (to be finalized with payload data budget).	A

5.3 Defining Computer System Requirements

Table 4: MultiScape 2000 Payload Data Handling Characteristics

Parameter	Specification
Storage Capacity	128 GB EDAC-protected NAND flash
Image Reduction	Binning of RAW data, CCSDS 122.0-B-2
Control Interface Options	I^2C, SPI, RS-422, SpaceWire
Data Interface Options	LVDS and SpaceWire (ECSS-E-ST-50-12C), SART

Table 5: Payload storage, image reduction, and interface requirements

Requirement Area	Requirement Statement(s)
Storage Capacity	1. The spacecraft is not required to store all raw imagery on the main OBC. 2. The platform OBC shall store and manage mission timelines, housekeeping telemetry, fault/event logs, and payload metadata. 3. Bulk imaging storage shall be hosted within the payload data handling subsystem ($\geq$ 128 GB EDAC-protected NAND).
Image Reduction	1. The payload shall provide reduced image products (e.g., binned and/or compressed) over SpaceWire for downlink staging. 2. The SpaceWire link shall support a physical rate $\geq$ 150 Mbit/s and sustained payload throughput $\geq$ 100 Mbit/s.
Control & Data Interfaces	1. The spacecraft computer system shall provide at least one payload command/control interface among: I^2C, SPI, RS-422, or SpaceWire. 2. The spacecraft computer system shall provide a compatible payload data interface supporting LVDS and/or SpaceWire in accordance with ECSS-E-ST-50-12C.

6 OBDH Architecture

6.1 Different Options for Configurations of OBC's

Option of Main OBC + Payload Computer: Using a **Main Cubesat COTS OBC** for Boot, safe mode, Telecommand/telemetry handling, Scheduling, Management of Thrusters, FDIR with main interfaces and a separate **Payload Computer** for the payload: High-rate data ingest from payload, Onboard processing, Staging data for X-band downlink with SpaceWire, LVDS and High Speed Storage NAND or SSD.

Main OBC: GOMSpace NanoMind A3200[16]
Payload Computer: MA61C CubeSat[26]

Option of Single High-End OBC: Using a single High-End space-grade OBC with PDPU for all tasks. Need for high speed SpaceWire link and on-board processing through FPGA for image compression. Telecommand/telemetry handling, Scheduling, Management of Thrusters and ADCS housekeeping all in one.

Single High-End OBCs: GOMSpace NanoMind HP-MK3[17], Sirius QuadCore LEON4FT[2]

6.2 Trade-Off Between Options

Table 6: Trade-off between OBC/C&DH architecture options (single high-end OBC vs split architecture vs Sirius QuadCore)

Criterion	**NanoMind HP MK3 (Single High-End Computer)**[17]	**NanoMind A3200 + MA61C (Split Architecture)**[26]	**Sirius QuadCore (Sirius OBC + Sirius TCM)**[2]
Processor / Compute Capability	**High.** Xilinx Zynq 7030/7045; Dual ARM Cortex-A9 up to **800 MHz** + FPGA fabric (125k/350k logic cells).	**Low–moderate.** MCU-class OBC + LEON-based payload computer; suitable for platform control + routing/buffering (payload processing mainly external).	**Moderate–high (robust). LEON4FT quad-core** fault-tolerant processor, up to **250 MHz per core**; supports Linux or RTEMS; SMP support and FPU per core.
SpaceWire Support	**Native. 3 independent** bi-directional full-duplex SpaceWire interfaces (payload data transfer) up to 200Mbit/s.	**Native (via MA61C).** MA61C provides SpaceWire routing/handling.	**Native. 4× SpaceWire up to 300 Mbit/s** with an **inbuilt router**.
On-board Data Storage / Mass Memory	**Very strong. 70 GB eMMC (pSLC) + 233 GB eMMC (MLC)**; also 256 MB NOR; supports redundancy features (e.g., redundant image, bit-flip detection).	**Moderate.** Typically distributed across nodes; payload computer may provide buffering (mission dependent).	**Not fully specified in this sheet.** QC includes a combined system with **Sirius TCM** providing mass-memory/CCSDS stack; datasheet lists boot/image memories and SDRAM but does not state TCM storage capacity here.
Fault Tolerance / SEU Mitigation	**Moderate.** Requires mission-level SEU mitigation strategy (watchdogs, ECC where available, scrubbing, software FDIR, etc.).	**Higher (relative).** Heritage-oriented fault-tolerant approach via LEON-class + separation of responsibilities.	**High (explicit).** SEE tolerance stated; **TMR on boot flash** and **EDAC on memories**.
Interfaces (low-rate buses)	**Strong.** 2× CAN on COM connectors (plus additional PL CAN interfaces reserved/future with licensing), RS422, RS485, I2C, LVDS clock/PPS, GPIO.	**Moderate.** Usually sufficient but depends on exact harnessing and which node hosts which interface.	**Moderate.** 2× CAN 2.0b, 1× UART (RS422), 9× GPIO, 1× SPI.
Power Consumption (typical)	**Moderate.** Idle current example: 150 mA @ 12 V (Linux idle, no PL services) ⇒ ∼1.8 W idle (indicative; depends on load).	**Lower (typically).** Two smaller nodes often lower than a high-end SoC, but mission-dependent.	**Moderate. Normal power consumption 4 W**.
AIT / System Complexity	**Lower HW complexity** (single unit) but software coupling can increase integration effort.	**Higher HW complexity** but clean separation of platform vs payload handling can simplify testing/fault isolation.	**Modular approach.** Explicitly designed as Sirius OBC + TCM chain; can simplify integration.
Space Heritage	**Moderate.** Limited Space Heritage	**High**. High Space Heritage on both OBCs	**High**. Over a decade of error correction design heritage
Cost / Procurement Risk (qualitative)	**Higher** (high-end SoC + large memory); strong vendor ecosystem for CubeSats.€55,000–€90,000 (estimate)	**Moderate** (two units, more integration).€40,000–€70,000 (estimate).	**Moderate–high** (specialised avionics chain); exact cost depends on configuration/TCM options.

Table 7: Comparison of Mass Memory Architectures for the Two Computer System Options

Criterion	**NanoMind HP MK3 (Single Computer)**	**NanoMind A3200 + MA61C (Split Architecture)**
Volatile Memory (RAM)	**256 MB RAM** for flight software execution, buffering, and payload handling.[17]	**Limited RAM** on A3200 and MA61C, sufficient for control/routing/housekeeping.
Non-Volatile Boot Memory	NOR Flash for bootloader, safe-mode firmware, and critical configuration.[17]	Internal flash for firmware and configuration storage.
High-Reliability Mass Memory	**70 GB eMMC (pSLC)** for telemetry, logs, timelines, critical data.[17]	No dedicated large high-reliability platform-level memory.
High-Capacity Mass Memory	**233 GB eMMC (MLC)** for bulk storage and downlink staging.[17]	Bulk storage provided by payload subsystem (128 GB EDAC NAND).
Total Available Non-Volatile Storage	**∼303 GB** integrated within the spacecraft computer.[17]	Platform storage limited; bulk dominated by payload-side memory.
Payload Data Storage Strategy	Store/manage/stage payload products directly on HP MK3.	Payload is primary repository; MA61C routes/buffers.
Autonomy Before Downlink	**High.** Multi-day buffering depending on duty cycle/compression.	**Moderate.** Limited by payload memory and downlink schedule.
Embedded IMU Sensor	Does not provide internal IMU nor Earth sensors; external ADCS sensors required.	A3200 provides internal 3-axis gyroscope and accelerometer.
Fault Tolerance and Data Protection	Needs EDAC/scrubbing + partitioning pSLC/MLC for integrity.	**Payload memory is EDAC-protected**; platform memory is modest and simpler to protect.

We select the **GOMSpace NanoMind HP-MK3**[17] as the baseline OBC because it closes the mission's data handling + autonomy requirements with the lowest overall system risk. Its tiered non-volatile memory (70 GB pSLC for high-reliability platform data plus 233 GB MLC for bulk payload products[17]) provides 300 GB on-board storage, enabling multi-day buffering and downlink staging without relying exclusively on payload-side memory, which is important given the high-volume EO data and intermittent X-band contact opportunities. In addition, consolidating platform control and payload data handling into a single high-performance unit reduces avionics interfaces and integration complexity compared to a split OBC + SpaceWire-node architecture, while maintaining a clear separation of "critical" vs "bulk" data through pSLC/MLC partitioning. The selected EPS/battery architecture also supports the required 14.4 V bus level using a 4S battery configuration (12–16.8 V range), compatible with the power distribution concept.[17, 1]

The GomSpace NanoMind HP-MK3 is a space-graded compute platform and is reported as tested to more than 20 krad total ionizing dose (TID), making it suitable for typical LEO radiation environments.[17]

Based on the SpaceWire needs for the MultiScape200 data handling for 150 Mbit/s sustained payload throughput

	TCP/UDP
Single interface (unidirectional)	150 Mbit/sec
Three interfaces (unidirectional)	150 Mbit/sec
Three interfaces (bidirectional)	80 Mbit/sec

Figure 1: OBC SpaceWire Characteristics

Figure 2: GOMSpace NanoMind HP-MK3

Technical Information

NANOMIND HP MK3	
SoC	Xilinx Zynq 7030/7045 Programmable SoC. • Dual ARM Cortex A9 MPCore, clocked up to 800 MHz • Powerful FPGA module - 125K / 350K logic cells
Volatile Memory	1024MB DDR3 (512MB with ECC enabled)
Non-volatile Memory	256 MB NOR flash 70GB eMMC (pSLC) and 233GB eMMC (MLC)
Mechanical dimensions	95 mm x 95 mm x 31.5 mm
Mass	240g
Radiation	20 kRad TID

KEY INTERFACES	
SpaceWire	x3, data link/network layer
USB	x1, host/device
Fully Configurable FPGA I/O	11 x LVDS pairs, 10 x I/O
Conditionally Configurable FPGA I/O	12 x LVDS pairs (or Spacewire), 8 x I/O (or RS-485)
Conditionally Configurable ARM I/O	6 x I/O (or eMMC#2)
Others	CAN/SPI/RS422/RS485/PPS

Figure 3: Technical Characteristics of HP-MK3

6.3 Simple Logic Block Architecture

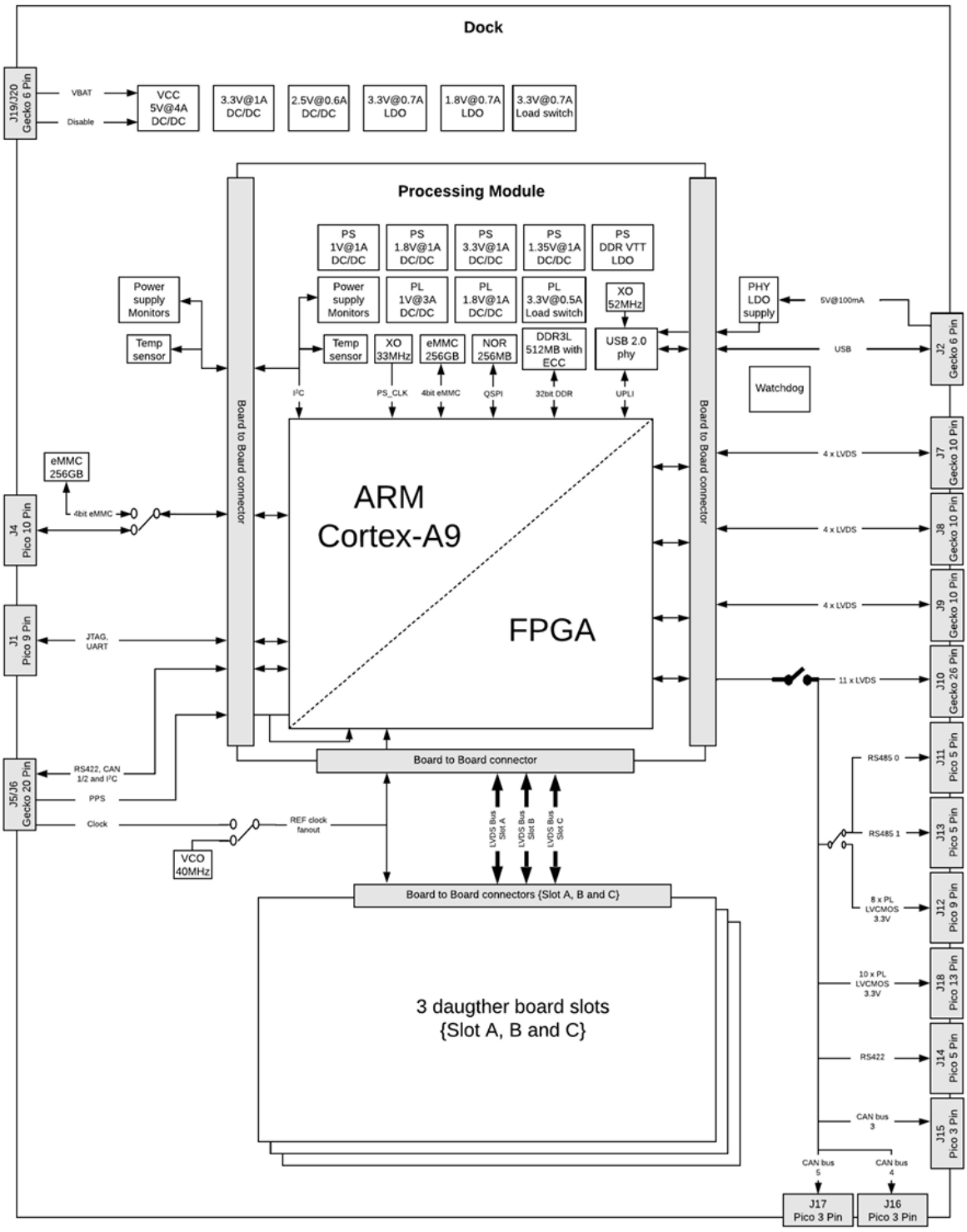

Figure 4: Block diagram of the NanoMind HP MK3

6.4 Interconnections

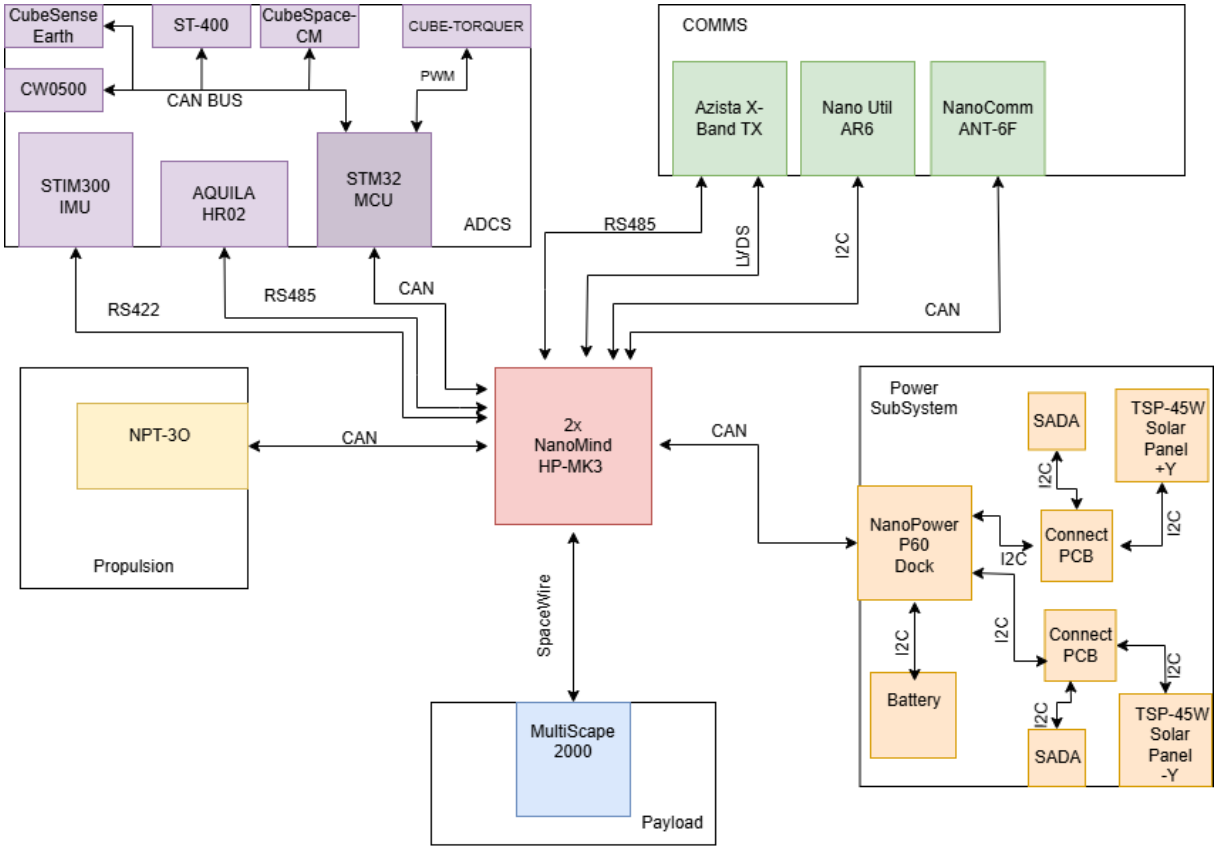

Figure 5: Interconnections Simple Logic Block Diagram

Table 8: Subsystems connected to the platform CAN bus

CAN Bus Node	Subsystem / Unit
OBC	NanoMind HP-MK3 [17]
EPS	NanoPower P60[18]
Propulsion	Propulsion controller (NPT-30) [28]
TT&C	UHF/VHF transceiver[30]

Table 9: Used interfaces and subsystem mapping (with HP-MK3 availability)

Interface	**Subsystem(s) using it**	**HP-MK3 available interfaces[17]**
CAN	EPS (NanoPower P60)[18], Propulsion[28], UHF/VHF [30]radio, STM32 ADCS MCU[27]	CAN1 + CAN2 on COMM1/2 (J5/J6); plus PL CAN1–3 (J15/J16/J17) CAN Bus will be used
SpaceWire	Payload (MultiScape 2000[25])	3 × SpaceWire links (PL DIFF 1–3: J7/J8/J9)
LVDS	X-band transmitter[7] (high-rate data)	11 × LVDS pairs (PL DIFF IO-4: J10)
RS-422	IMU (STIM300), Star Tracker (ST400)	RS-422 on COMM1/2 (J5/J6) + 1 × PL RS422-1 (J14)
RS-485	Sun sensors (AQUILA[6], ×6)	2 × full-duplex RS-485 (PL RS485-1/2: J11/J13)
I^2C	Antenna release (NanoUtil AR6)	I^2C on COMM1/2 (J5/J6) (no internal pull-ups; connect slave devices)

The OBC's native interfaces support the mission needs: CAN for platform housekeeping/control (e.g., EPS and propulsion), SpaceWire/LVDS for high-rate payload data paths, and RS-422/RS-485 for robust differential sensor links, with I^2C retained for short-harness local functions. This mapping validates that each subsystem can be interfaced using a compatible, flight-typical bus without unnecessary protocol conversion.

6.5 MCU for ADCS Housekeeping

An STM32-based microcontroller[27] is introduced as a dedicated ADCS housekeeping and low-level control unit, offloading the NanoMind HP-MK3 from time-critical sensor/actuator interfacing and concentrating the ADCS I/O locally. The STM32 interfaces the ADCS devices over a local CAN bus (CubeWheel CW0500[9] reaction wheels, CubeSense Earth sensor[15], and CubeSpace magnetometer[11]), In addition, the STM32 generates PWM control signals to drive the CubeTorquer magnetorquer[10] rods through the associated power driver stage. The STM32 then forwards consolidated ADCS telemetry and accepts high-level attitude control commands from the HP-MK3 via the spacecraft CAN backbone, enabling a modular and scalable ADCS architecture with reduced OBC port usage.

Table 10: STM32G4A1CE — General characteristics (summary)

Item	**STM32G4A1CE (typ./max)**
CPU core	Arm Cortex-M4 with FPU and DSP instructions
Max CPU frequency / performance	Up to 170 MHz / 213 DMIPS
Embedded non-volatile memory	Up to 512 KB Flash (with ECC support)
Embedded SRAM	112 KB total (96 KB SRAM + 16 KB CCM SRAM)
Supply voltage range	$V_{DD}, V_{DDA} = 1.71\,\mathrm{V}$ to $3.6\,\mathrm{V}$
CAN interface	2× FDCAN controllers
Other serial interfaces	5× USART/UART + 1× LPUART; 3× I^2C; 3× SPI
USB	USB 2.0 Full-Speed device
Analog subsystem	3× ADC (up to 16-bit with oversampling); 4× 12-bit DAC; 4× op-amp; 4× comparator
Timers	15 timers (incl. advanced motor-control timers with PWM/dead-time/emergency stop)
Security / integrity	AES hardware accelerator; true RNG; CRC unit; unique ID

The 2 FDCAN interafaces will be used: One for a CAN Bus for housekeeping data of the ADCS, and the other one accepting high-level altitude commands from the OBC and forwarding back telemetry from the sensors.

6.6 Bus Topology

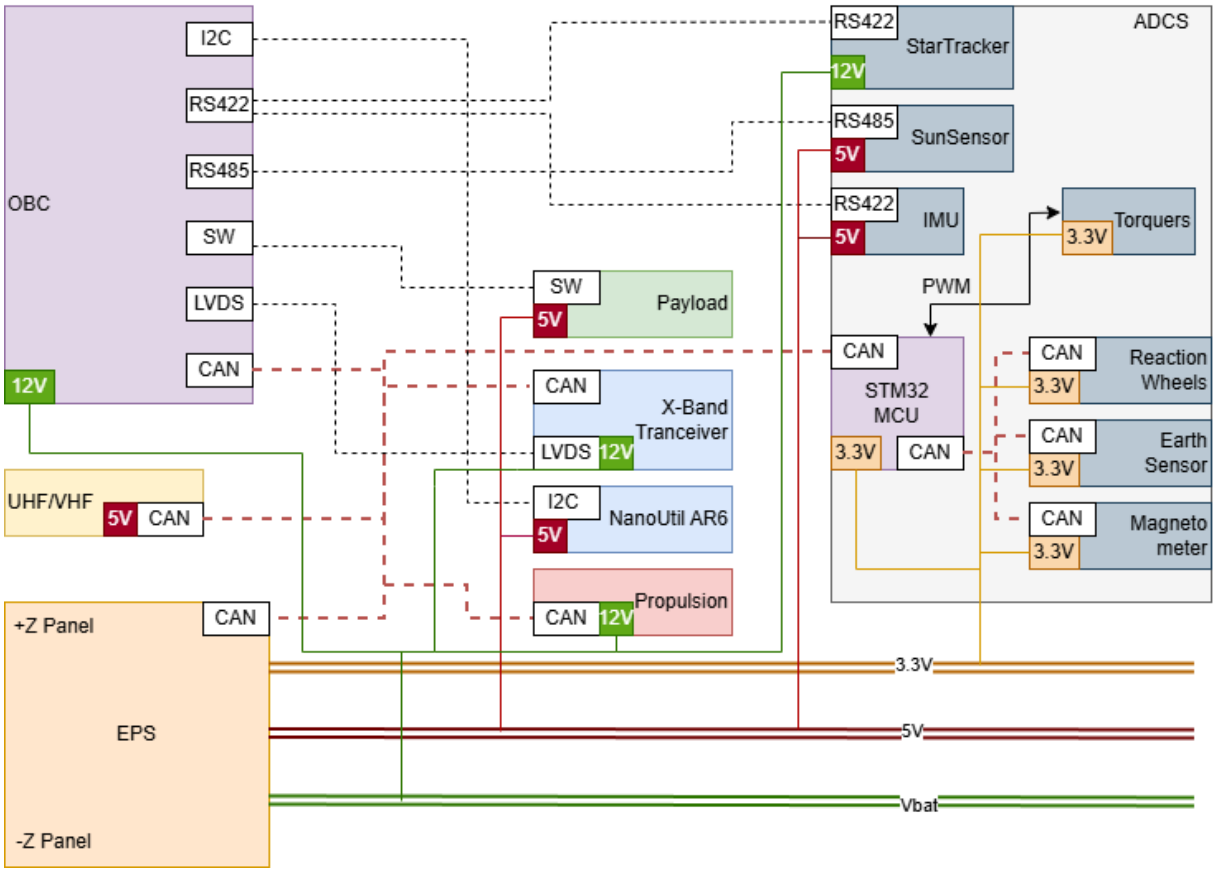

Figure 6: Bus topology diagram

7 Mass Memory Calculation & Data Budget

7.1 Mass Memory

Table 11: NanoMind HP MK3 Available Memory[17]

Memory Type	Size	Usage
RAM	256 MB	Execution memory for flight software, buffering of payload data, real-time processing, and temporary data handling.
NOR Flash	16–64 MB	Bootloader storage, safe-mode firmware, and critical configuration parameters.
eMMC (pSLC)	70 GB	High-reliability non-volatile storage for telemetry, logs, mission timelines, and critical platform data.
eMMC (MLC)	233 GB	High-capacity bulk storage for reduced payload products, science data staging, and downlink buffering.

7.2 Data Budget

For the Altitude of 450 km we have:

$$DR = \frac{D_{\text{sample}}}{T_s} = 1{,}441{,}326.80\,\text{Mbps}$$

Table 12: Data size of a single image as a function of orbital altitude[25]

Description	**Altitude (km)**	**Data$_{\text{image}}$ (bits)**	**Data$_{\text{image}}$ (kBytes)**
Single image data size: $Pixels_x \times Pixels_y \times$ (bits/pixel) $\times$ (bands)	450	942 951 628	1 151 064

Let N be the number of images captured per day. The daily payload data production is:

$$Data_{\text{day}} = 1{,}151 \times N \text{ MB/day}$$

For subsystems such as AODCS modules and communications we are gonna use assumptions from other missions[4] [29], so we can present a table estimating the data that the OBC is going to have to handle on a daily basis. We are gonna split the data in 4 sections: **Payload Data** that have been calculated above, **Housekeeping Data** continuous telemetry measurements that monitor the health and status of the spacecraft subsystems ensuring safe and reliable operation of the satellite, **Sensor Data** processed measurements acquired by IMUs, star trackers, magnetometers, sun sensors, **Proccess Variables** parameters that describe and regulate the spacecraft's active system states—such as bus voltage levels, battery state of charge, reaction wheel speeds, thruster valve states, heater duty cycles, and power mode configurations.

Table 13: Production of Monitoring Data within a Day

Data Type	**Size per Day**
Housekeeping Data	6.9 MB
Sensor Data	48.3 MB
Process Variables	138.2 MB
Total (Without Payload)	**193.4 MB/day**

Images per Day	**MB/day**	**GB/day**
1	1,151	1.15
5	5,755	5.76
10	11,510	11.5
20	23,020	23.0

Table 14: Daily payload data production as a function of number of images per day.

7.3 Image Compression

The NanoMind HP-MK3 is based on a Zynq System-on-Chip (SoC) architecture integrating a dual-core ARM processor with programmable FPGA logic.[17] This heterogeneous architecture enables separation of platform control tasks and high-throughput payload data processing. While the ARM cores execute flight software, telemetry management, and command sequencing, the FPGA fabric can be utilized for deterministic hardware acceleration of image processing algorithms.

The FPGA resources allow implementation of real-time image compression techniques such as CCSDS 122.0 [13]wavelet compression, predictive lossless coding, or adaptive region-of-interest (ROI) compression. Typical compression ratios between 3:1 and 6:1 can be achieved depending on mission requirements[8], significantly reducing daily payload data volume and X-band downlink duration. This capability enhances system autonomy, reduces memory pressure, and improves power efficiency during transmission phases.
Aaron Kiley's paper [22] describes that a CCSDS-123 family implementation reports a typical lossless compression ratio of 2.3:1 on 16-bit samples for an instrument use case

We will consider a 2:1 compression strictly loss-less.

7.4 Quantitative Impact of On-Board Image Compression

From the payload analysis, the uncompressed data production for one image per orbit (∼15.5 orbits per day) at 450 km altitude is:

$$Data_{\text{day, uncompressed}} \approx 17.8 \text{ GB/day}$$

By implementing hardware-accelerated image compression using the FPGA resources of the NanoMind HP-MK3, the daily data volume can be significantly reduced. Let CR denote the compression ratio:

$$Data_{\text{day, compressed}} = \frac{Data_{\text{day, uncompressed}}}{CR}$$

Compression Scenarios

Compression Ratio (CR)	Compressed Data (GB/day)	Data Reduction (%)
2:1	8.9	50%
4:1	4.45	75%
6:1	2.97	83%
10:1	1.78	90%

Table 15: Daily payload data volume as a function of compression ratio.

Impact on Mass Memory and Downlink

Assuming a conservative loss-less compression ratio of 2:1:

$$Data_{\text{day, compressed}} = \frac{17.8}{2} = 8.9 \text{ GB/day}$$

This reduction:

- Decreases mass memory usage by 50%.
- Reduces required X-band transmission time proportionally.
- Lowers peak power demand during downlink sessions.
- Increases operational autonomy between ground contacts.

Therefore, exploitation of the FPGA-based compression capability of the NanoMind HP-MK3 substantially improves system efficiency and mission robustness.

8 Electrical Power Subsystem - Solar Array Sizing

8.1 EPS - Introduction

The Electrical Power System (EPS) is responsible for generation, storage, regulation, and distribution of electrical power to payload and all subsystems.[21] The need for microsatellites to generate the maximum power from small body mounted solar panels has led in many cases to the first demonstration of advanced technologies on these spacecraft. Because of the short schedules characteristic of microsatellite programs there is the opportunity to obtain real flight data for new solar cells which can be valuable in designing solar arrays for future large scale spacecraft.

For this report we are going to focus only on the Solar Panels design needed to support the mission's needs.

8.2 Power System Requirements

Table 16: EPS System Requirements

Req. ID	Sub.	Requirement Statement	V&V
SR-EPS-01	EPS	The EPS shall provide regulated power to all subsystems and maintain power-positive operation in nominal mission modes.	A
SR-EPS-02	EPS	The EPS shall support battery charging during sunlit periods and spacecraft operation throughout eclipse periods.	A
SR-EPS-03	EPS	The spacecraft shall include a launch inhibit/kill-switch (RBF or equivalent) to prevent activation during integration and launch.	I / T
SR-EPS-04	EPS	The EPS shall support a low-power safe mode state when commanded or autonomously triggered (e.g., low battery).	A / T

8.3 Solar Array Design Proccess

The following parameters are considered for the solar array sizing calculations:

- Nominal bus voltage: $V_{\text{bus}} = 14.4\,\text{V}$[1]
- Orbit altitude: $h = 450\,\text{km}$ (LEO, Sun-synchronous, 10:00/22:00)
- Eclipse duration: $T_e = 2095.3\,\text{s}$ (34.92 min)
- Earth radius: $R_E = 6378.137\,\text{km}$
- Earth gravitational parameter: $\mu = 3.986004418 \times 10^{14}$
- Solar constant: $P_{\text{sun}} \approx 1360$
- We make the assumption that Propulsion needs will be met by the battery completely

Eclipse and Daylight Duration

The orbital period is calculated as:

$$T = 2\pi\sqrt{\frac{(R_E + h)^3}{\mu}} = 5615.19\,\text{s}\ (93.59\,\text{min}) \tag{1}$$

The daylight duration is:

$$T_d = T - T_e = 3519.89\,\text{s}\ (58.66\,\text{min}) \tag{2}$$

Table 17: Subsystem Power Consumption

SubSystem	Consumption (W)
OBC (Idle)	1.8[17]
OBC (Active Processing)	2.08[17]
Thermal	9.8
Propulsion (Standby)	1–5[28]
Propulsion (Active)	43–81[28]
ADCS (Idle)	10.2
ADCS (Peak)	14.8
TT&C Downlink_T_X (Idle)	–
TT&C Downlink_T_X (Transmit)	22[7]
UHF/VHF Antenna Rx	1.3 [30]
UHF/VHF Antenna RxTx	5 [30]
Payload (Imaging)	5.8[25]
Payload (Idle)	2.5[25]

The Thermal Control Subsystem power consumption is adopted from a reference[4] mission due to the lack of finalized thermal hardware information provided by the thermal team.

Table 18: ADCS hardware count and total power consumption (all units per hardware)

Hardware	Quantity	Total Power Consumption
Reaction Wheel[9]	4	1344 mW
Magnetorquer[10]	3	1644 mW
Star Tracker[3]	2	2000 mW
Sun Sensor[6]	6	90 mW
Earth Sensor[15]	6	1680 mW
Magnetometer[11]	2	460 mW
IMU[24]	2	3000 mW
TOTAL	**25 pcs**	**10218 mW**

Daylight power consumption:

$$P_d = P_{\text{payload,img}} + P_{\text{ADCS,Active}} + P_{\text{TT\&C,Transmit}} + P_{\text{OBC}} + P_{\text{Thermal}} = 31.6\,\text{W} \tag{3}$$

Eclipse power consumption:

$$P_e = P_{\text{Payload,idle}} + P_{\text{ADCS,Low-Power}} + P_{\text{TT\&C,Idle}} + P_{\text{OBC}} + P_{\text{Thermal}} = 22.3\,\text{W} \tag{4}$$

Considering efficiencies $X_d = 0.65$ and $X_e = 0.85$, the required solar array power is:

$$P_{sa} = \frac{P_d}{X_d} + \frac{P_e T_e}{T_d X_e} \approx 55.51\,\text{W} \tag{5}$$

We assume an incidence angle of $\theta = 0°$, since the ADCS maintains continuous Sun-pointing (Sun-tracking) attitude control. [1]

Assuming GaAs triple-junction cells:

- Efficiency: $\eta = 0.30$
- Degradation rate: $d = 0.0275$
- Lifetime: $L = 5\,\text{years}$

Lifetime degradation factor:

$$(1-d)^L \approx 0.87 \tag{6}$$

End-of-life power density:

$$P_{\text{EOL}} = \eta P_{\text{sun}} \cos\theta (1-d)^L \approx 354.9 \text{ W m}^{-2} \tag{7}$$

$$A_{sa} = \frac{P_{sa}}{P_{\text{EOL}}} \approx 0.156 \text{ m}^2 \ (1564 \text{ cm}^2) \tag{8}$$

8.4 Solar Panels Selection

The NanoPower TSP-45W[19] solar panel regulators from GomSpace are selected as candidates solar power conditioning units for the spacecraft Electrical Power System. The unit provides Maximum Power Point Tracking (MPPT) regulation with high conversion efficiency and supports deployable solar array architectures with total generation levels up to 90W.

This configuration results in a power margin of approximately 62% relative to the nominal required solar array power. The excess capacity ensures robust operation throughout the 5-year mission lifetime, supports peak power modes, and allows for safe battery charging under worst-case illumination and degradation conditions. Consequently, the 2× TSP-45W configuration represents a conservative and reliable design choice for the spacecraft solar power regulation subsystem.

$$\text{Power Margin} = \frac{90 - 55.51}{55.51} \times 100\% \approx 62\% \tag{9}$$

Table 19: NanoPower TSP-45W Solar Panel Regulator Characteristics[19]

Parameter	**Value / Description**
Manufacturer	GomSpace
Product Name	NanoPower TSP-45W
Function	Solar Panel Regulator (SPP / MPPT)
Maximum Input Power	90 W, 45W each
Supported Solar Array Type	Body-mounted and deployable panels
Maximum Solar Array Voltage	Up to 60 V (panel dependent)
Regulation Method	Maximum Power Point Tracking (MPPT)
Number of MPPT Channels	Multiple independent inputs
Supported Battery Type	Li-ion / Li-Po
Nominal Battery Bus Voltage	14.4 V (4S Li-ion compatible)
Peak Conversion Efficiency	95% (typical)
Heritage	Flight-proven GomSpace EPS family

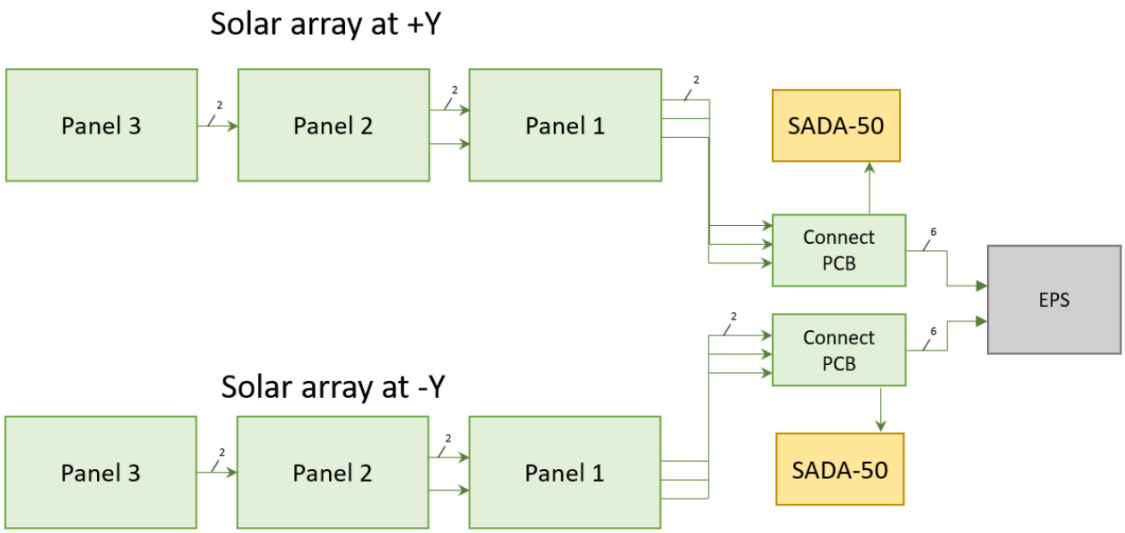

Figure 7: Overall block diagram of the power connections of the TSP-45W

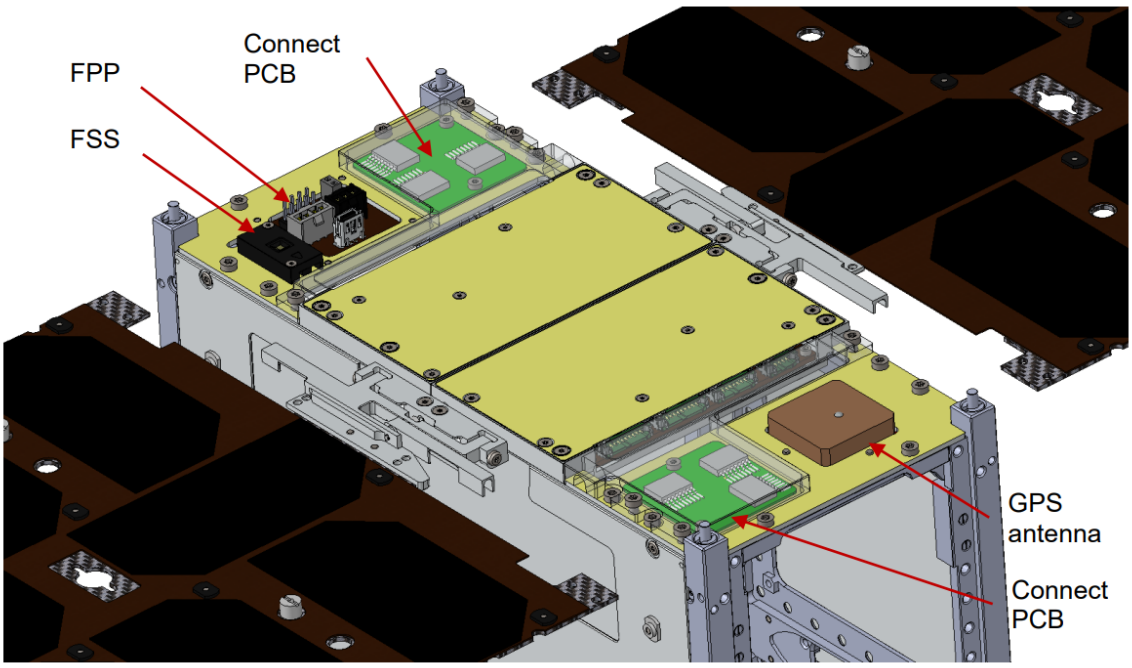

Figure 8: Physical position of the Connect PCB, FSS, FPP, and GPS

The GomSpace NanoPower SADA-50 is a compact and highly durable mechanism for sun tracking of solar arrays about 1 axis, and is qualified for 5 years in low earth orbit. The SADA-50 is intended as the sun tracking unit for the deployable solar array NanoPower-TSP 45W deploy but can also be purchased as a standalone unit. The SADA-50 is integrable on the GomSpace 6U structure on either of the Z faces.[19]

Figure 9: SADA-50[23]

8.5 Power Diagram

Providing a simple logic block architecture of the power distribution within the satellites

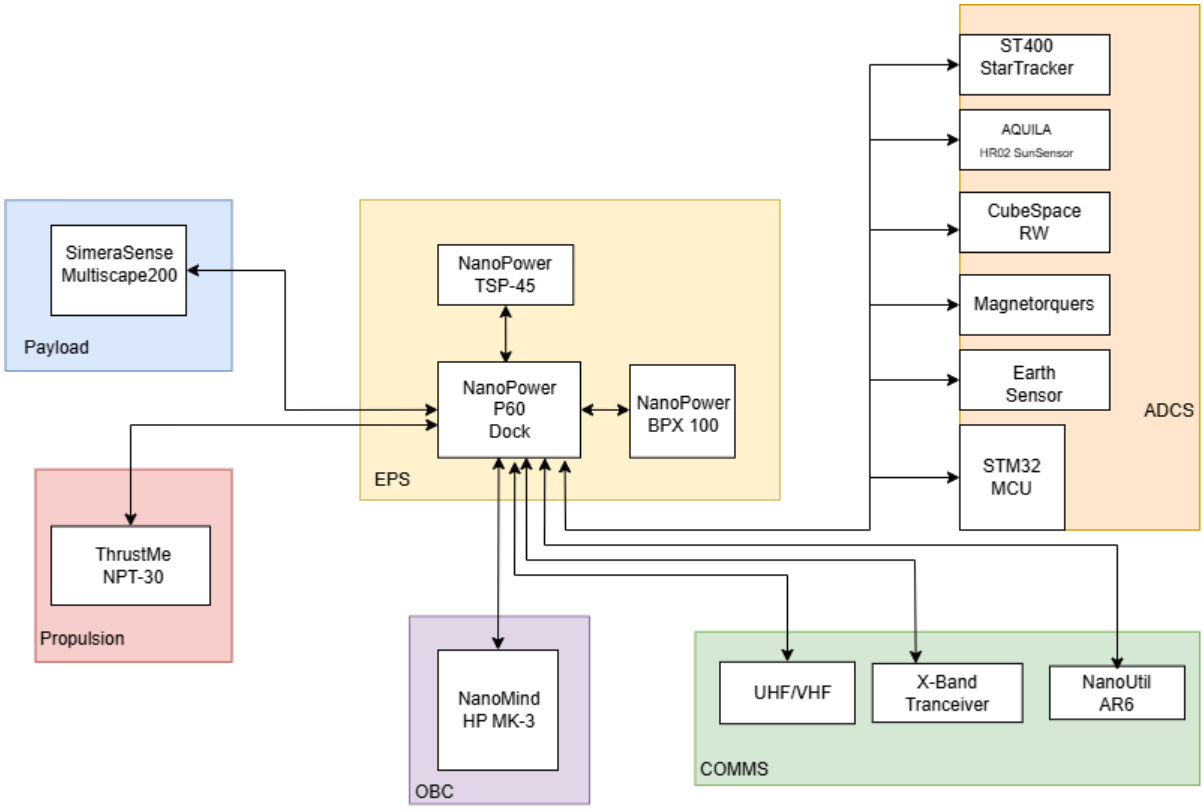

Figure 10: Logic Block Power Diagram

9 Conclusion

This report presented the preliminary design of the On-Board Data Handling (OBDH) and Electrical Power System (EPS) subsystems for the 32U HIVE CubeSat mission in a 450 km Sun-Synchronous orbit. The design approach followed a top-down SMAD-based methodology, beginning with mission requirements and proceeding through subsystem trade-offs, quantitative sizing, and architecture justification.

The selection of the GomSpace NanoMind HP-MK3 as the baseline OBC closes the mission's autonomy, processing, and storage requirements within a single high-performance unit. Its Zynq SoC architecture enables deterministic flight software execution on the ARM cores while exploiting FPGA resources for real-time payload data processing and compression. With a total non-volatile storage capacity of approximately 303 GB (70 GB pSLC for critical platform data and 233 GB MLC for bulk payload products), the system supports multi-day buffering and robust downlink staging. Implementation of 3:1 on-board image compression reduces daily payload data volume from approximately 17.8 GB/day to 2.96 GB/day, significantly lowering X-band transmission duration and mass memory pressure while increasing operational autonomy.

The EPS design supports a 14.4 V nominal bus (4S Li-ion configuration, 12–16.8 V operational range), compatible with subsystem requirements. Solar array sizing demonstrates a required end-of-life generation capability of approximately 55.5 W. The selected 2× NanoPower TSP-45W configuration provides up to 90 W with MPPT regulation, resulting in a power margin of approximately 62%. This margin ensures reliable operation over the 5-year mission lifetime, supports peak power modes, and enables safe battery charging under worst-case illumination and degradation conditions.

Overall, the integrated OBDH and EPS architecture satisfies mission-level requirements for data handling throughput, storage autonomy, processing capability, and power generation with appropriate engineering margins. The resulting design is conservative, scalable, and technically coherent for a high-data-rate Earth observation CubeSat platform operating in V-LEO.

Bibliography

[1] AERO 701. *Design of Space micro-satellite team project*. 2026.

[2] AAC. *Sirius QuadCore LEON4FT*. URL: https://www.aac-clyde.space/what-we-do/space-products-components/command-data-handling/sirius-quadcore.

[3] AAC. *ST400*. URL: https://www.aac-clyde.space/what-we-do/space-products-components/adcs/st400.

[4] Aaliya Khan Aaesha Almazrouei. *A Complete Mission Concept Design and Analysis of the Student-Led CubeSat Project: Light-1*. URL: https://www.mdpi.com/2226-4310/8/9/247.

[5] European Space Agency. *On-Board Computers Data Handling*. URL: https://www.esa.int/Enabling_Support/Space_Engineering_Technology/Onboard_Computers_and_Data_Handling.

[6] Aquila. URL: https://www.newspacesystems.com/wp-content/uploads/2025/11/SUN-SENSOR-25.11-1.pdf.

[7] Azista. *X-Band Transmitter*. URL: https://satsearch.co/products/azista-x-band-satellite-data-transmitter.

[8] *CCSDS Standards*. URL: https://ccsds.org/Pubs/120x1g3.pdf.

[9] CubeSpace. URL: https://www.cubespace.co.za/products/reaction-wheel/.

[10] CubeSpace. *Cubetorquer*. URL: https://www.cubespace.co.za/uploads/d3ecdd54-cfc4-4a18-89e5-e7e033a42b66.pdf.

[11] CubeSpace. *magnetometer*. URL: https://www.cubespace.co.za/products/magnetometers/.

[12] Cappelletti Cutler James W.Beningo. *Cubesat Handbook*. "10 - On-board data handling systems". Academic Press.

[13] ESA. *CCSDS 122.0*. URL: https://www.esa.int/Enabling_Support/Space_Engineering_Technology/Onboard_Data_Processing/CCSDS_Image_Data_Compression_ASIC.

[14] ESA. *Extreme Space*. URL: https://www.esa.int/Science_Exploration/Space_Science/Extreme_space/Surviving_extreme_conditions_in_space?fbclid=IwAR2POwWBPsnNyQ-8bpIe44PnO-m5PUFnWjWQBYV6LUCMprZqbPhpW2MqQMI.

[15] Gen2. *Cubesense*. URL: https://www.bing.com/search?pglt=427&q=cubesense+earth+gen+2&cvid=949aa543fec647dc8732910066a8737a&gs_lcrp=EgRlZGdlKgYIABBFGDkyBggAEEUYOdIBCDQ
FORM=ANNTA1&ucpdpc=UCPD&PC=ASTS.

[16] GOMSpace. *NanoMind A3200*. URL: https://gomspace.com/shop/subsystems/command-and-data-handling/nanomind-a3200.aspx.

[17] GOMSpace. *Nanomind HP-MK3*. URL: https://gomspace.com/product/nanomind-hp-mk3/.

[18] GOMSpace. *Nanopower P60*. URL: https://gomspace.com/product/nanopower-p60/.

[19] GOMSpace. *TSP-45W*. URL: https://gomspace.com/product/nanopower-tsp-45w/.

[20] Amadis Horbach. *Development of an on-board computer for a nanosatellite*. URL: https://matheo.uliege.be/bitstream/2268.2/11659/8/Development_of_an_on_board_computer_for_a_nanosatellite.pdf?utm_source=chatgpt.com.

[21] David F. Everett James R. Wertz. *Space Mission Engineering, The New SMAD*. 2020.

[22] Aaron Kiley... *The new CCSDS standard for low-complexity lossless and near-lossless multispectral and hyperspectral image compression*. URL: https://www.researchgate.net/publication/348297390_The_new_CCSDS_standard_for_low-complexity_lossless_and_near-lossless_multispectral_and_hyperspectral_image_compression.

[23] SADA-50. URL: https://gomspace.com/wp-content/uploads/2025/09/Sada-50-NanoPower-2.pdf.

[24] SAFRAN. *STIM300*. URL: https://safran-navigation-timing.com/document/stim300-datasheets/.

[25] Simera Sense. *MultiScape 2000 Imager*. URL: https://satsearch.co/products/simera-sense-multiscape200-cis.

[26] SpinTech. *MA61C*. URL: https://www.spinintech.com/data-handling-and-avionics.

[27] ST. *Arm® Cortex®-M4 32-bit MCU+FPU, 170 MHz / 213 DMIPS*, URL: https://www.st.com/resource/en/datasheet/stm32g4a1ce.pdf.

[28] ThrustME. *NPT-30-I2*. URL: https://www.thrustme.fr/products/npt30-i2.

[29] George Tzanoulinos. *Design of a CubeSat-Based Multi-Regional Positioning Navigation and Timing System in Low Earth Orbit*. URL: https://pergamos.lib.uoa.gr/item/uoadl:3421697.

[30] NanoCom Ant-6f UHF. URL: https://gomspace.com/wp-content/uploads/2026/01/gs-man-nanocom-ant-6f-uhf-vhf-310.pdf.